FTS22138

2008-2016 FORD SUPER DUTY 6” & 8” BASIC SYSTEM

4331 EUCALYPTUS AVE. ~~ CHINO, CA 91710
909-597-7800 Fax 909-597-7185
2008-2015 FORD F-250/350 SUPER DUTY 4 WD

FTS22138 6”& 8” BASIC KIT

	FTS22138	6"& 8" Basic System
Qty	Part #	Description
2	FT30467BK	Radius Arm Bracket Drv / Pass
1	FT30122	Pitman Arm
1	FT30433	Hdwr Sub-Assembly
1	FT30143BK	Frt. Bumpstop Drop Driver
1	FT30144BK	Frt. Bumpstop Drop Passenger
1	FT30402	Steering Stabilizer Drop 08-10
1	FT30583BK	Steering Stabilizer Drop 11-UP
1	FT3400-112P	Sway Bar Drop Driver 08-14
1	FT3400-112D	Sway Bar Drop Pass. 08-14
1	FT30373BK	Trac Bar Drop Bracket 6" & 8"
1	FT30273BK	Trac Bar Support Tube 6" & 8"
1	FT30285	Hardware Bag (basic)
1	FT30629	Sway Bar Drop Driver 15-up
1	FT30630	Sway Bar Drop Pass 15-up

	FT30433	Hdwr Sub-Assembly Kit
Qty	Part #	Description
1	FT30258	Sector Shaft Nut
2	FT30432	Brake line Bracket
1	FT30059	Brake line Bracket
2	FT30409	8’’ Brake Hard Line
2	FT30410	Brake Line Union
2	FT30276	Frt. Brake line Bracket
2	FT30277	ABS Line Brkt @ Radius Arm
1	FTREGCARD	Reg. Card
1	FTAS12	Fabtech Sticker
2	FT22097i	Instruction Sheet

	FT30285 Hardware Kit-	
Qty	Description	Location
2	5/16"-18 x 1 1/4" Bolt	Brake Line Bracket
2	5/16"-18 Nyloc Nut	
4	5/16" SAE Flat Washer	
2	5/16"-18 x 1" Thrd Fmng Bolt	
2	5/16"-18 x 1 1/4" Bolt	Bump Stop Center
2	5/16" SAE Flat Washer	
2	5/16" Split Washer	
4	7/16"-14 x 1 1/2" Bolt	Bump Stop Bracket
4	7/16"-14 Nyloc Nut	
8	7/16" SAE Flat Washer	
4	7/16"-14 x 1 1/4" bolt	Sway Bar Drop Brckt
4	7/16"-14 C-Lock Nut	
8	7/16" SAE Flat Washer	
8	3/4"-10 x 1 1/2" Bolts	Drop Brackets
8	3/4"-10 C-Lock Nut	
16	3/4" SAE Flat Washer	
2	1/4"-20 x 1" Hex Cap Bolt	ABS Line & Brkt
2	1/4"-20 C-Lock Nut	@ Radius Arm
4	1/4" SAE Flat Washer	
4	5/16"-18x1" Thrd Frmng Bolt	
2	Adel Clamp	ABS Line & Brkt
1	1/8" x 2" Cotter Pin	Drag Link
1	Thread Lock	
7	8" Zip Ties	4wd & ABS Lines
1	M12-1.75 X 70MM Bolt	Steering Stabilizer
2	M12 SAE Flat Washer	
1	M12-1.75 C-Lock Nut	

TOOL LIST:

- **FLOOR JACK**
- **JACK STANDS**
- **ASSORTED METRIC AND S. A. E. WRENCHES AND SOCKETS**
- **DRILL WITH ASSORTED DRILL BITS**

CHECK ALL PARTS INCLUDED IN THIS KIT TO THE PARTS LIST ABOVE BEFORE BEGINNING INSTALLATION OF THE KIT. IF ANY PIECES ARE MISSING, CONTACT FABTECH AT 909-597-7800

READ ALL INSTRUCTIONS THOROUGHLY FROM START TO FINISH BEFORE BEGINNING INSTALLATION.

CHECK PARTS & HARDWARE AGAINST THE PARTS LIST BEFORE BEGINNING THE INSTALLATION TO ASSURE THE KIT IS COMPLETE, CONTACT FABTECH @ 909-597-7800 IF KIT IS INCOMPLETE.

Fabtech suspension systems when used on “Gas engine” trucks may require that the front drive shaft be modified. This is done to give adequate clearance between the driveshaft and the factory exhaust. Fabtech does not recommend modifying the exhaust and / or the catalytic converters. Contact Fabtech for additional information.

**NOTE - DO NOT PROCEED WITH INSTALLATION OF SUSPENSION KIT UNTIL VERIFYING THE PROPER FACTORY PITMAN ARM LENGTH.

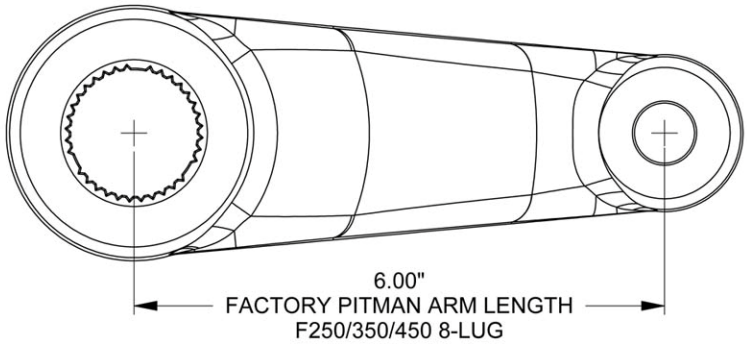

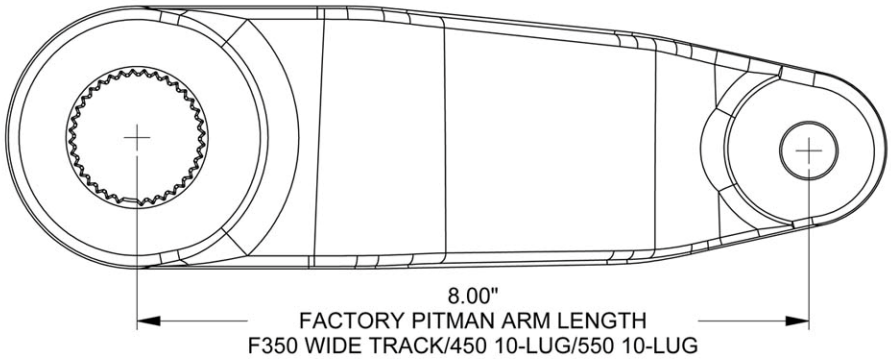

CALL FABTECH FOR ADDITIONAL INFORMATION.

LIFT INSTRUCTIONS:

1. Disconnect the negative terminal on the battery. Jack up the front end of the truck and support the frame, at the front frame rails, with jack stands. **NEVER WORK UNDER AN UNSUPPORTED VEHICLE.** Remove the front tires.

2. Working from both sides of the truck, remove the brake calipers and tie them up out of the way. **DO NOT ALLOW THE CALIPERS TO HANG FROM THE BRAKE LINES!** Remove the brake line and ABS lines from the front side and the rear side of the lower spring perch on the axle and save the hardware.

3. Locate the ABS lines on the radius arms and disconnect it at the plug on the fender well. Remove the ABS line brackets from the radius arms and save the hardware

4. Supporting the front axle with two floor jacks, remove the front shocks and discard. Remove the sway bar end links from the axle mount and save with the hardware.

5. Lower the front axle allowing the coil springs to come free of tension. **EXERCISE EXTREME CAUTION WHEN WORKING WITH COIL SPRINGS UNDER LOAD!** Remove the coil springs from the truck and discard, save the factory upper coil isolator.

6. Remove the factory steering stabilizer from the frame mount and save the hardware. Remove the steering stabilizer frame bracket and save the hardware. Discard the frame bracket. Leave the steering stabilizer connected to the drag link. SEE PHOTO BELOW.

7. Remove the drag link from the pitman arm and save factory hardware. You will need to use a two jaw puller to remove drag link from the pitman arm. **USE CARE NOT TO DAMAGE THE THREADS ON THE DRAG LINK!**

8. Remove the trac bar from the frame bracket and save the original hardware. Remove the trac bar bracket from the frame and save the original hardware and discard the factory trac bar bracket. SEE PHOTO BELOW.

9. Remove the factory pitman arm from the steering box using a large pitman arm puller or large two-jaw puller. Discard the hardware and the pitman arm. SEE PHOTO BELOW.

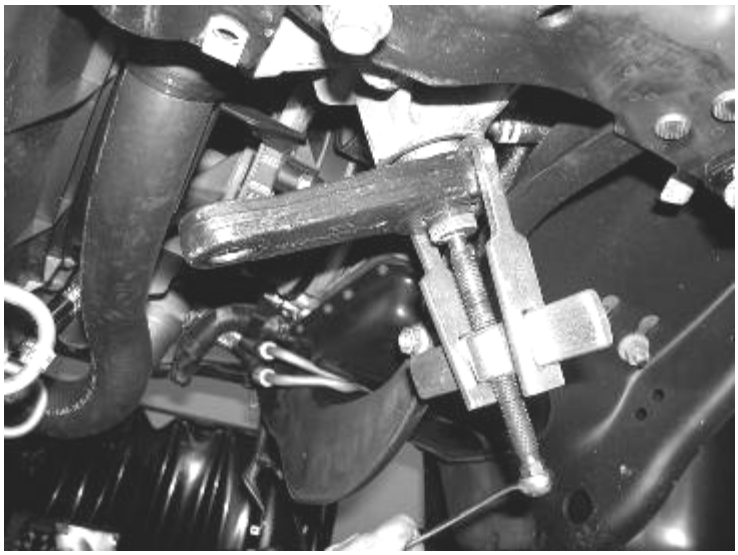

10. Locate FTS30122 new drop pitman arm. Attach to the steering box in the same indexed position as the factory pitman arm was when removed. **Install the provided FT30258 Sector Shaft Nut and torque to 350 ft. lbs. (Note: this is a one-time only use nut, once it is tightened on the sector shaft and removed, it must be discarded.**

11. Locate FT30373BK Trac Bar Frame Bracket. Attach to the frame using the original hardware in the same position. Torque bolts to 110 ft. lbs. **DO NOT ATTACH THE TRAC BAR TO THE FRAME BRACKET AT THIS TIME.**

12. With the front axle still supported by the floor jack, remove both of the front factory radius arms from the axle and the factory frame mounts. Save the factory hardware.

13. Working from the driver side of the truck, locate FT30467 radius arm drop bracket. Place the bracket into the factory radius arm bracket on the frame. Attach the bracket to the factory bracket using the supplied ¾” x 1 ½” bolts, nuts, and washers through the original holes in the frame. Torque bolts to 317 ft. lbs.

14. Reinstall the radius arm onto the truck using the original hardware. Attach to the axle first then to the new drop bracket using the rear most hole. Leave loose at this time. SEE DRAWING BELOW.

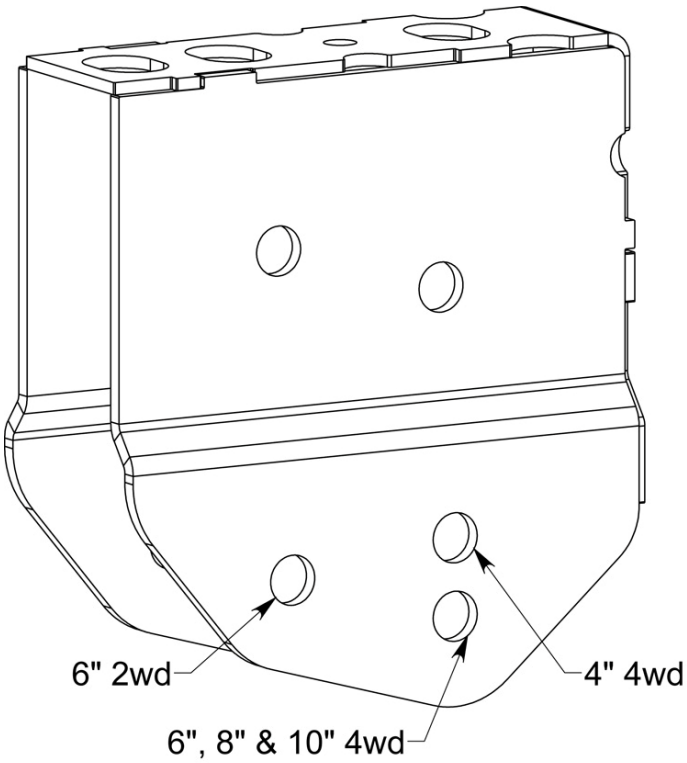

15. Repeat step thirteen thru fourteen on the passenger side of the truck.

16. Working from both sides of the truck, locate and remove the factory front bump stops and save. These can be removed by pulling on the bump stop itself free from the cup. Remove the factory mounting cup from the frame and discard the hardware. Locate FT30143 Drv. Side front bump stop drop brackets. Using a drill with a 7/16” drill bit, drill out the factory locator pin hole in the frame. Now attach the bump stop to the hole in the frame using the supplied 7/16” x 1 ½” bolt, nut, and washer. Once attached and aligned with the frame drill the second hole with the 7/16” drill bit. Locate FT30144 Pass. side and center on the bottom of the frame between the factory rivets. (Pass. side does not have a locating hole). Mark the two holes from the new bracket to the frame and drill the two holes. Attach the bracket to the frame with the supplied 7/16” hardware.

17. Locate the factory bumpstop cup and use a die grinder with a cut-off wheel to cut off the locating tab from the bottom. Attach the last hole with the supplied 7/16” x 1 ½’ hardware. Attach the factory bump stop cup to the new bracket using the supplied 5/16” x 1 ¼” bolt, flat washer, and split washer. Before tightening the bolt, align the flat

part of the bumpstop cup to the flat side of the drop bracket Press the factory bump stop back into the cup. SEE PHOTOS BELOW

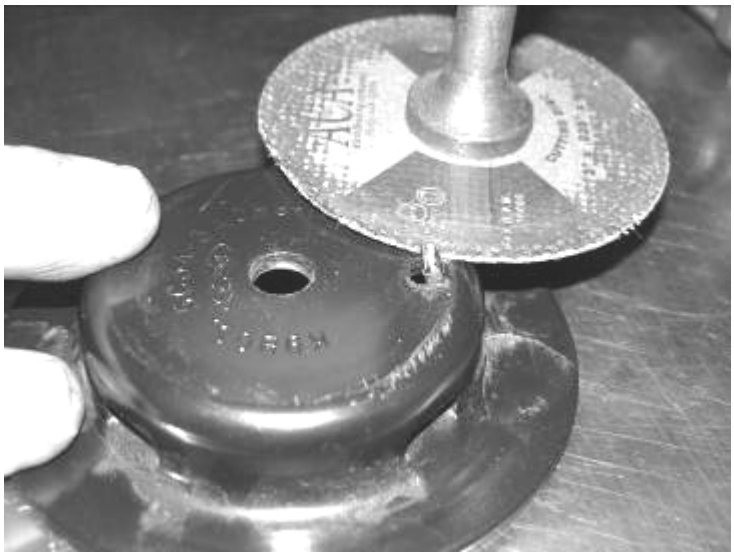

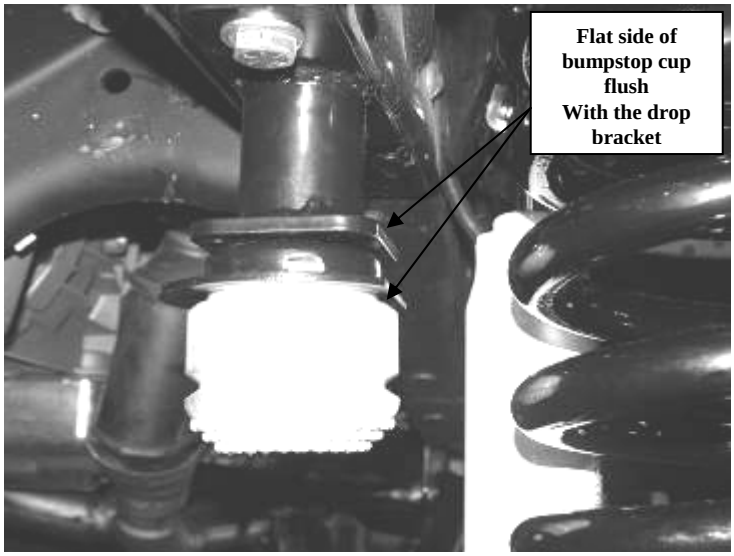

18. Using the coil springs from the 6” lift coil spring kit, install the coil springs into the truck in the factory location using the original factory upper coil isolator.

19. Using a floor jack raise the front axle enough to compress the front coils approx. 1”. Locate the front shocks FTS7188 (6” kit) or FTS7189 (8” kit) and install onto the truck. **Note: Some shock mounts will require cutting a ¼” from the top of the factory shock tab. If required, use a die grinder with a cut-off wheel and remove the top ¼” of the tab. Sand and paint bare/ exposed metal**. SEE PHOTOS BELOW

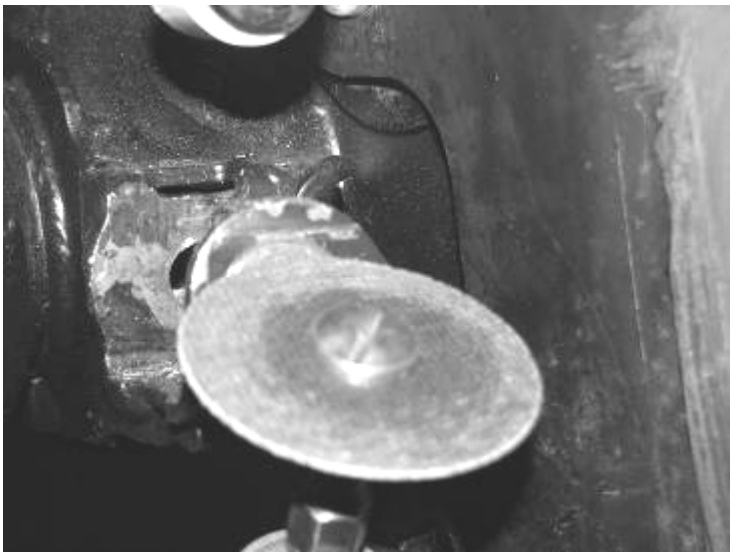

20. Torque the rear radius arm pivot bolts to 200 ft. lbs. the front pivots bolts to 200 ft. lbs.

21. Locate the factory brake line mount on the front side of the frame. Remove the bracket from the frame and save the hardware. Locate (FT30276 Front Brake Line Drop Bracket 2008-2010) or the (FT30432 Front Brake Line Drop Bracket 2011-13) and attach to the frame using the original hardware in the factory brake line hole (with the offset of the bracket to the rear of the truck on 2008-2010).

Complete step 22 on 2008-13 models only.

22. Locate FT30409 Hard Brake Line Extension and separate the factory hose from the hard line. Install the supplied FT30410 union and hard line to the factory hard line. Move to step 26.

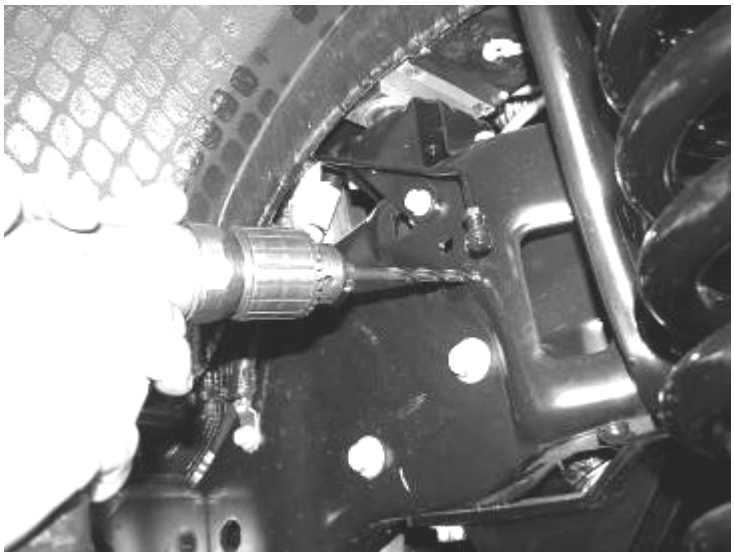

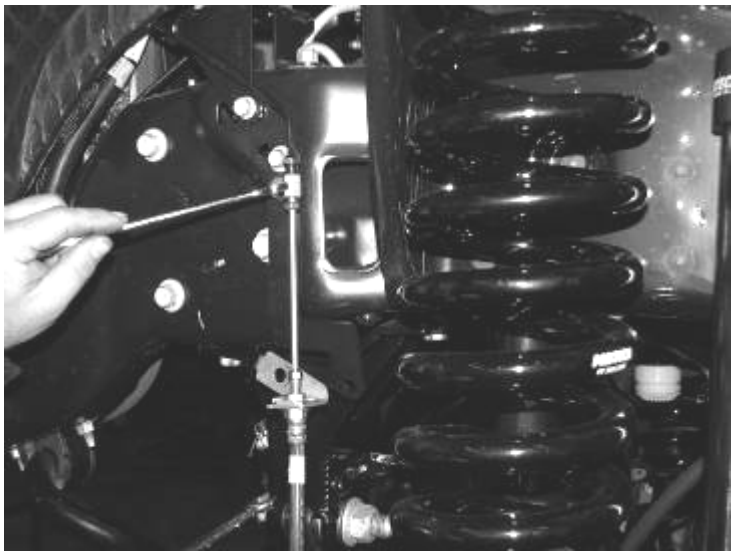

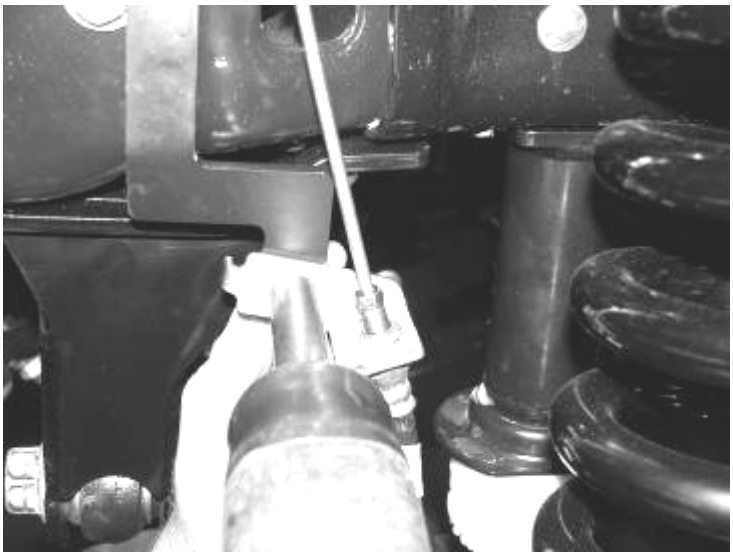

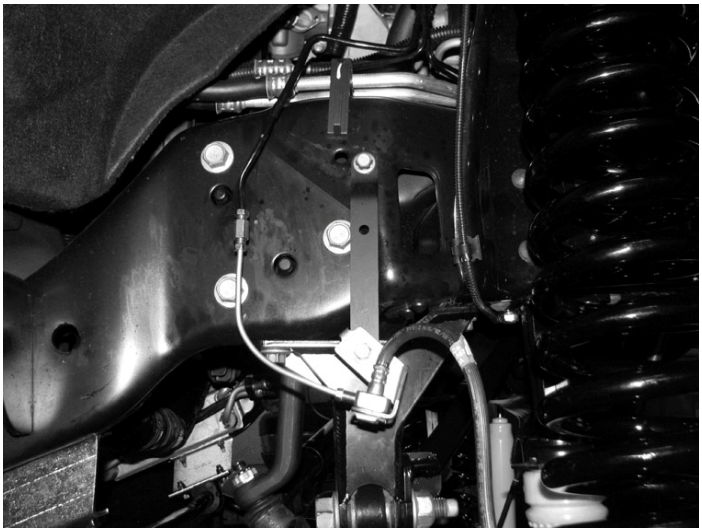

2011 Brake line bracket (FT30432) shown above

Complete step 23-25 on 2014 models only.

23. Remove the bolt holding the brake line to the frame and straighten out the factory hard line.

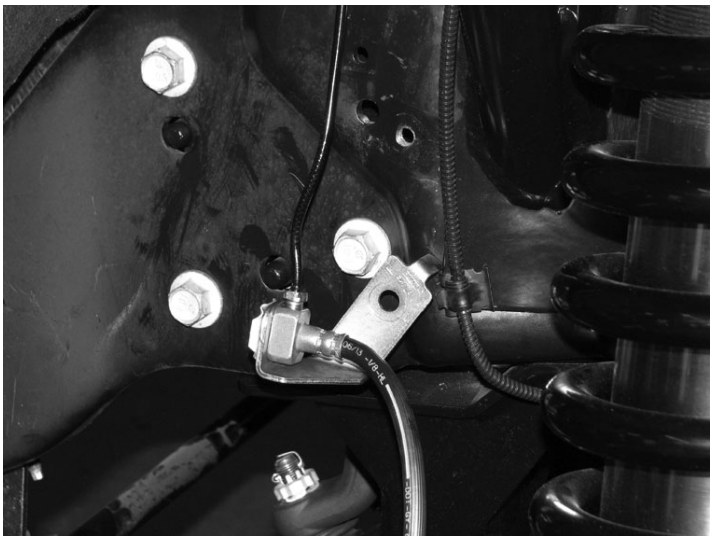

24. Using a die grinder remove the tang from the factory brake line bracket.

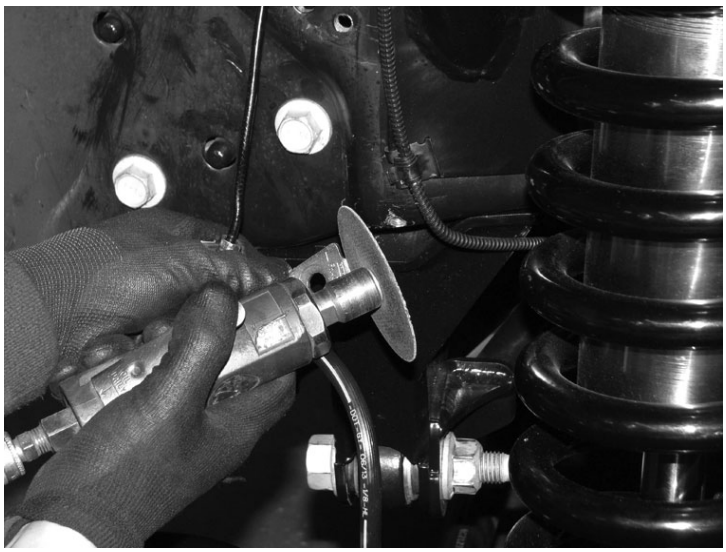

25. Move the bracket down 4” from the factory mounting hole. Using a ¼” drill bit, drill a new hole and remount the factory bracket using the supplied 5/16” self taping screw. Torque to 14 ft-lbs. Move to step 26.

Continue with Step 26 for all models.

26. Working on the driver side, disconnect the four wheel drive vacuum line from the front brake line bracket and reposition and reconnect behind the coil spring mount. Follow the 4wd vacuum line up to the 120 degree connector and remove it from the line and re-connect the lines with the existing line splint. Attach the vacuum line to the ABS line at the coil mount with 2 of the supplied zip ties and attach the vacuum line to the front differential vent hose with 2 more zip ties. **(this keeps all the lines in place during suspension travel, failure to follow this step could cause ABS or 4wd failure).** SEE PHOTOS BELOW

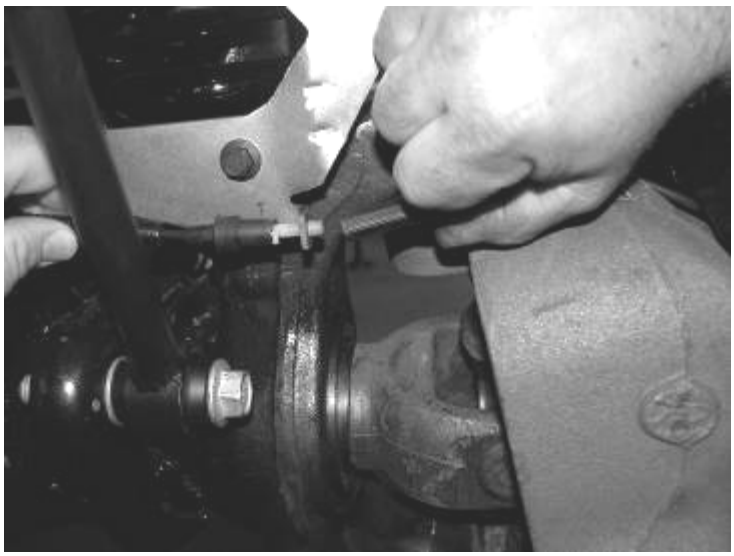

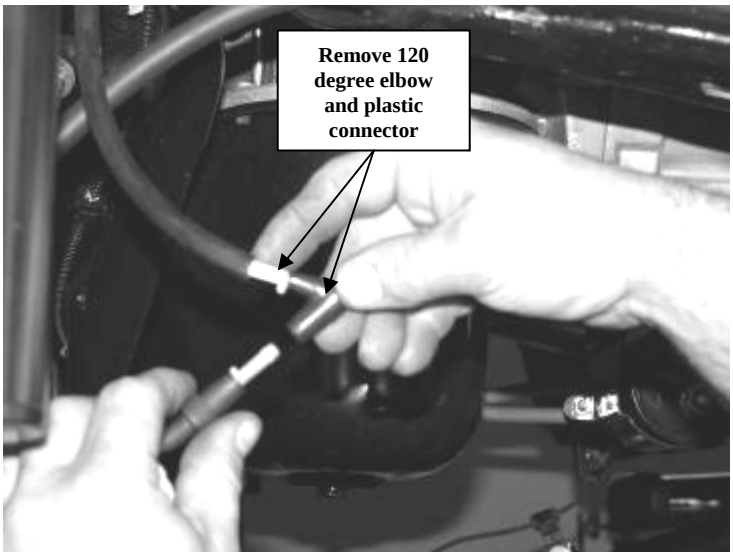

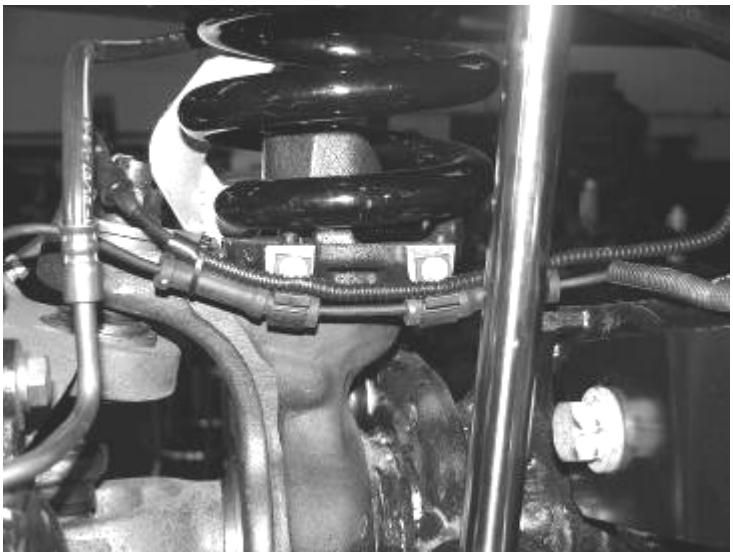

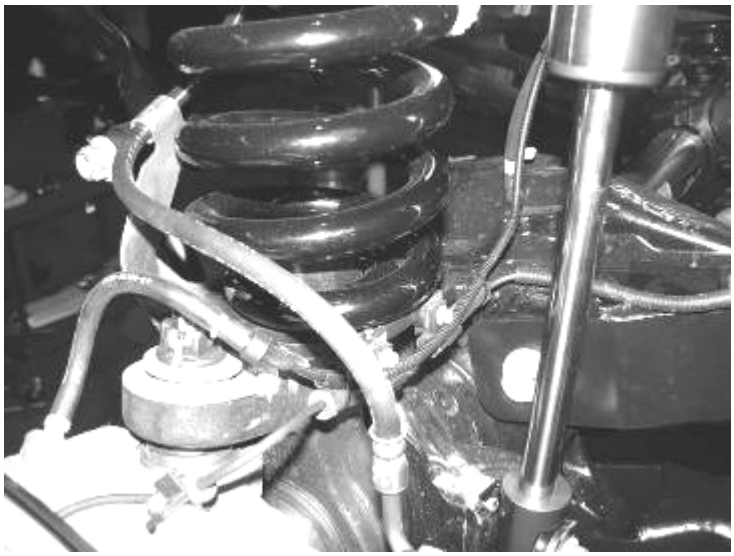

27. Locate FT30277 ABS Line Bracket and the supplied ¼” hardware, adel clamp, and thread-forming bolts. Locate the two slotted holes on the radius arm, measure a ½” in front of the upper hole and ¾” from the top of the radius arm. Mark and drill a 7/32” pilot hole. Using a thread-forming bolt, attach the line bracket to the radius arm in the middle hole. Now mark and drill the bottom hole in the line bracket to the radius arm. Remove the ABS socket connector from the frame and re-connect the ABS line. Install the factory front ABS mount onto the front of the radius arm. Place the provided adel clamp onto the ABS line mount (this may need to be moved) and attach to the new bracket with the supplied ¼” hardware SEE PHOTOS AND DRAWING BELOW

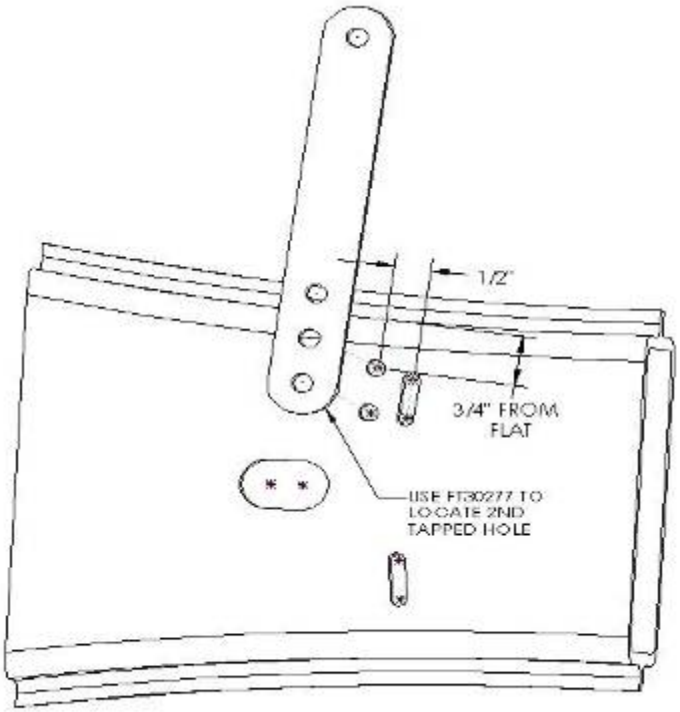

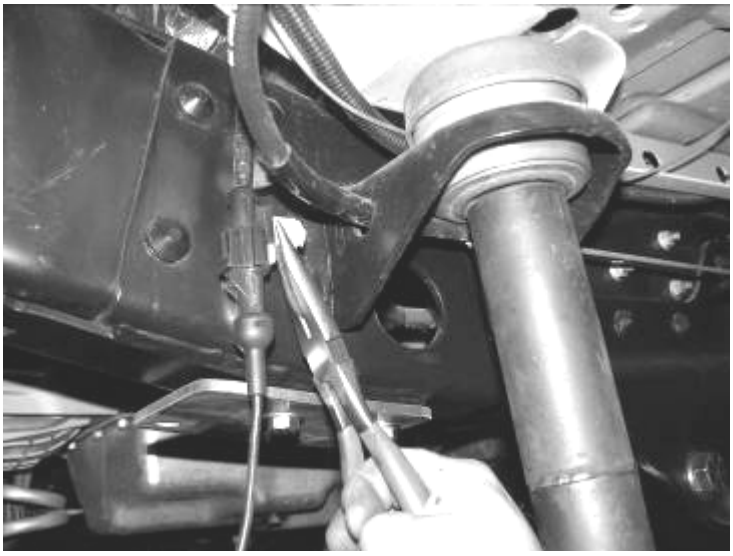

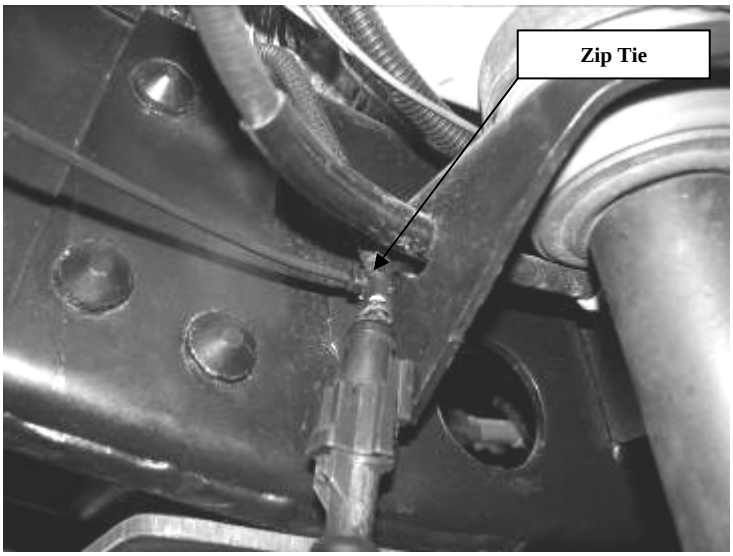

28. Locate FT30402 (08-10) or FT30583BK (11-UP) steering stabilizer drop bracket and install in the factory location using the original hardware. Torque to 50 ft. lbs. Reattach the factory stabilizer to the frame bracket using the original hardware. If installing on 11-UP vehicle, use supplied M12 hardware. If installing a Fabtech stabilizer do so at this time. SEE PHOTOS BELOW.

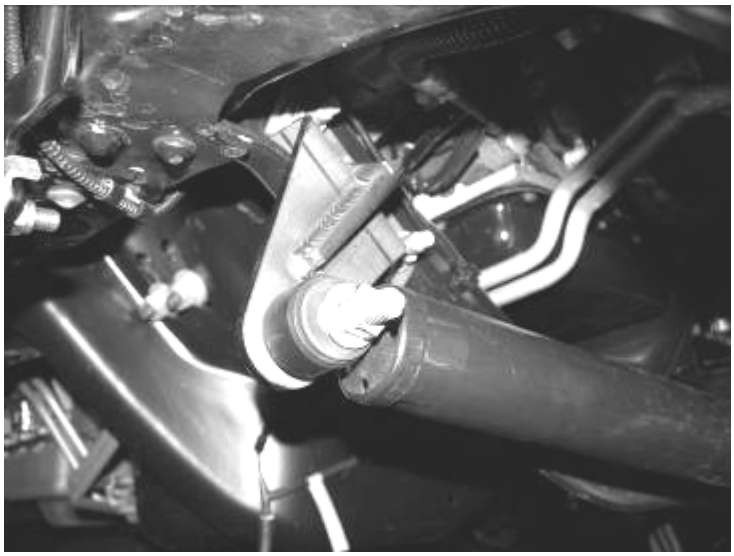

Picture Shown with Factory Stabilizer re-installed

Picture Shown on 11-UP

29. Remove the front sway bar from the frame mounts and save the hardware. (**15-UP)** Install FT30629 (Driver) and FT30630 (Pass) using the the supllied 7/16 hardware. (**08-14)** Install FT3400-112D & P sway bar frame drop brackets and attach to the frame (AS SHOWN IN PHOTOS)

    where the sway bar was originally attached using the factory hardware. **MOUNT THE DRIVER SIDE BRACKET ON THE PASSENGER SIDE, AND THE PASSENGER SIDE ON THE DRIVER SIDE.** Using the supplied 7/16" X 1 ¼"

    hardware, attach the sway bar to the new drop brackets. Reattach the factory sway bar end links to the axle mounts using the original hardware (Torque to 40 ft. lbs. once the truck is on the ground; do not tighten while the suspension is in the air). The new drop brackets are slotted at both mounting points. For the 6" lift, position the frame mount and sway bar all the way forward. torque to 35 ft. lbs. For an 8" lift, position the frame mount and sway bar all the way toward the rear. Torque to 35 ft. lbs. SEE PHOTO BELOW

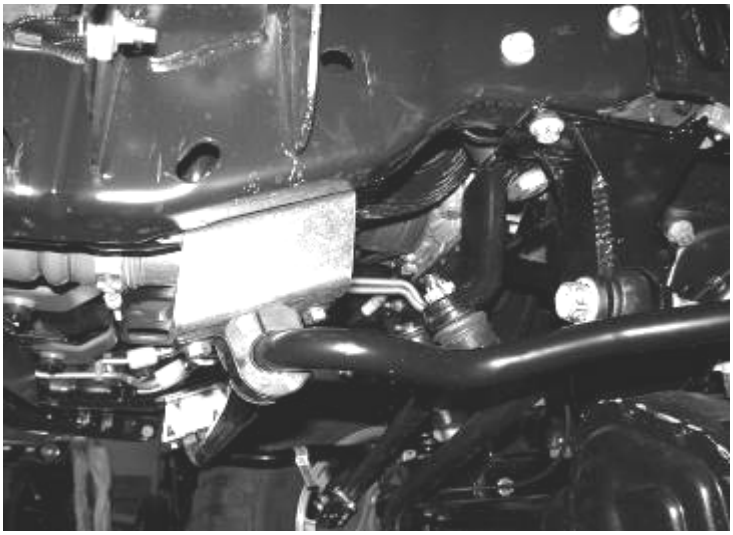

View of outer driver side frame rail

View of inner passenger side frame rail

30. Position the factory trac bar into the new trac bar bracket. Note: You may need to raise the axle up or down to align the hole. Using the original bolt insert it from the front side of the bracket towards the back. Do not push the bolt fully through at this time.
31. Locate FT30273 trac bar support bracket and attach first to the forward motor mount bolt on the driver side of the truck, then line the other end up to the trac bar bolt. Torque the factory motor mount bolt to 75 ft. lbs and the trac bar bolt to 400 ft. lbs. SEE PHOTO BELOW.

32. Refer to owner's manual for proper brake bleeding procedure.
33. Install the front tires and wheels. Torque lug nuts to wheel manufacturer's specifications.
34. Re-check all front hardware at this time for correct torque tightness. Torque the sway bar hardware and endlinks at this time.
35. Check the front brake lines and ABS line at this time for proper clearance from all moving parts. You will want to steer the wheels from left to right to make sure the lines clear the wheels.
36. Check the front-end alignment and set to the factory specifications. Re-adjust headlights.

REAR LIFT INSTRUCTIONS ARE ENCLOSED WITH REAR LIFT BOX.

RETORQUE ALL NUTS, BOLTS AND LUGS AFTER 500 MILES.

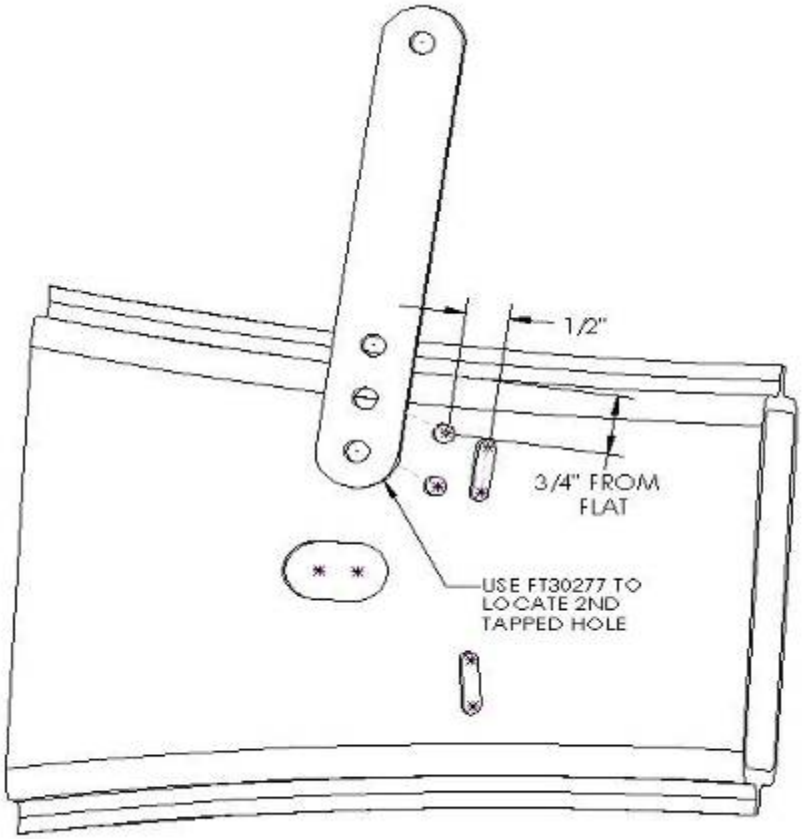

RETORQUE ALL NUTS, BOLTS AND LUGS AFTER 50 MILES AND PERIODICALLY THEREAFTER.

For technical assistance call: 909-597-7800

Product Warranty and Warnings-

Fabtech provides a Limited Lifetime Warranty to the original retail purchaser who owns the vehicle, on which the product was originally installed, for defects in workmanship and materials.

The Limited Lifetime Warranty excludes the following Fabtech items; bushings, bump stops, ball joints, tie rod ends, limiting straps, cross shafts, heim joints. These parts are subject to wear and are not considered defective when worn. They are warranted for 60 days from the date of purchase for defects in workmanship.

Take apart shocks are considered a serviceable shock with a one year warranty on leakage only. Service seal kits are available separately for future maintenance. All other shocks are covered under our Limited Lifetime Warranty.

Fabtech does not warrant any product for finish, alterations, modifications and/or installation contrary to Fabtech's instructions. Alterations to the finish of the parts including but not limited to painting, powdercoating, plating and/or welding will void all warranties. Some finish damage may occur to parts during shipping which is considered normal and is not covered under warranty.

Fabtech products are not designed nor intended to be installed on vehicles used in race applications or for racing purposes or for similar activities. (A "RACE" is defined as any contest between two or more vehicles, or any contest of one or more vehicle against the clock, whether or not such contest is for a prize). This warranty does not include coverage for police or taxi vehicles, race vehicles, or vehicles used for government or commercial purposes. Also excluded from this warranty are sales outside of the United States of America.

Installation of most suspension products will raise the center of gravity of the vehicle and will cause the vehicle to handle differently than stock. It may increase the vehicle's susceptibility to a rollover, on road and off road, at all speeds. Extreme care should be taken to operate the vehicle safely at all times to prevent rollover or loss of control resulting in serious injury or death. Fabtech front end Desert Guards may impair the deployment or operation of vehicles equipped with supplemental restraining systems/air bag systems and should not be installed if the vehicle is equipped as so.

Fabtech makes every effort to ensure suspension product compatibility with all vehicles listed in the catalog, but due to unknown auto manufacturers production changes and/or inconstancies by the auto manufacturer, Fabtech cannot be responsible for 100% compatibility, including the fitment of tire and wheel sizes listed. The Tire and Wheel sizes listed in Fabtech's catalog are only a guideline for street driving with noted fender trimming. Fabtech is not responsible for damages to the vehicle's body or tires.

Fabtech's obligation under this warranty is limited to the repair or replacement, at Fabtech option, of the defective product only. All costs of removal, installation or re-installation, freight charges, incidental or consequential damages are expressly excluded from this warranty. Fabtech is not responsible for damages and/or warranty of other vehicle parts related or non related to the installed Fabtech product. This warranty is expressly in lieu of all other warranties expressed or implied. This warranty shall not apply to any product that has been subject to accident, negligence, alteration, abuse or misuse as determined by Fabtech.

Fabtech suspension components must be installed as a complete system including shocks as shown in our current catalog. All warranties will become void if Fabtech parts are combined and/or substituted with other aftermarket suspension products. Combination and/or substitution of other aftermarket suspension parts may cause premature wear and/or product failure resulting in an accident causing injury or death. Fabtech does not warrant products not manufactured by Fabtech.

Installation of Fabtech product may void the vehicles factory warranty; it is the consumer's responsibility to check with their local vehicle's dealer for warranty disposition before the installation of the product.

It is the responsibility of the distributor and/or the retailer to review all warranties and warnings of Fabtech products with the consumer prior to purchase.

Fabtech reserves the right to supercede, discontinue, change the design, finish, part number and, or application of parts when deemed necessary without written notice. Fabtech is not responsible for misprints or typographical errors within the catalog or price sheet.

Instruction Sheet Part #- FT22138i 3/20/14 JP